SIGNLEADER
D I S P L A Y

Curved Top Tension Fabric Banner Stand

SAFE ZONE:
All critical elements (text, images, graphic element logos etc.) must be kept inside the blue box.

Anything left outside the blue box may be cut off during trimming.

BLEED ZONE 2 inches:
Make sure to extend the background images or colors, all the way to the edge of the black outline.

SHELVES AREA

⚠ **IMPORTANT**
Please send artwork with **CMYK** color mode with resolution **150 dpi**.
Be sure to **flatten** all images, **outline** all text and save as **PDF** or **JPG**

Printing Area: 35” x 78” (W x H)

PLEASE DELETE THIS LAYER BEFORE SAVING

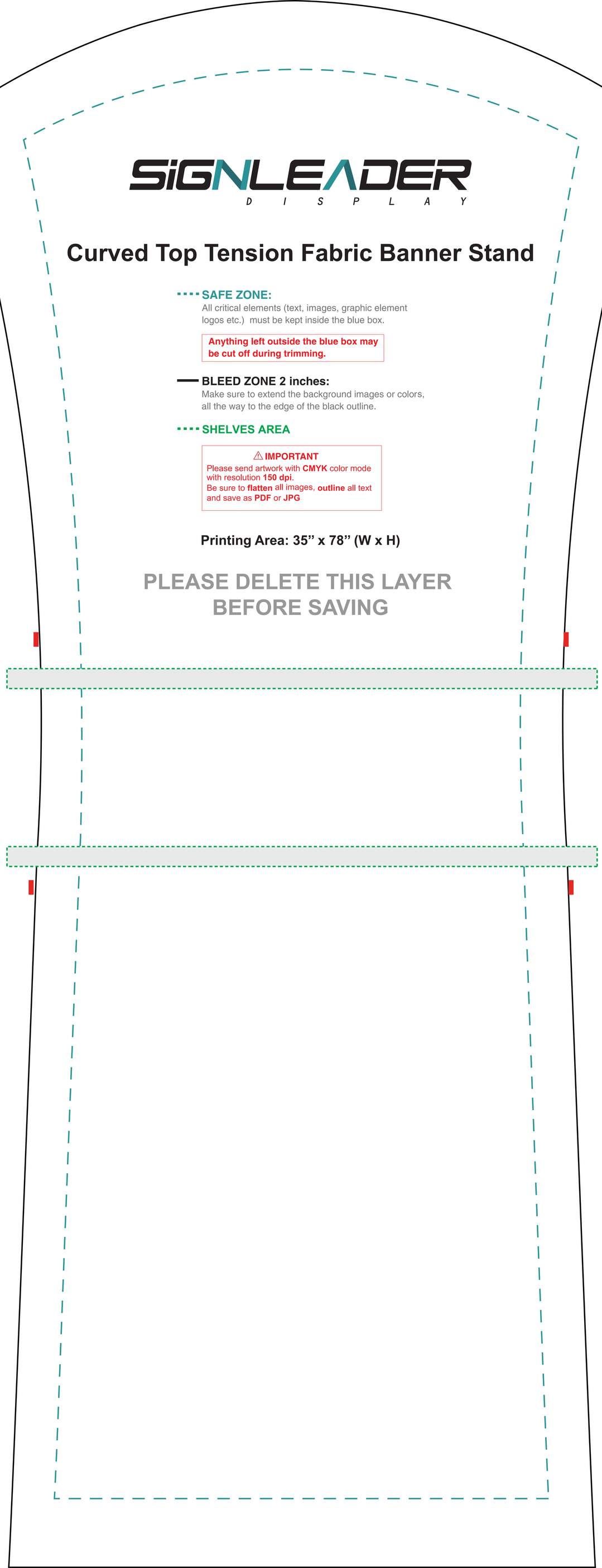
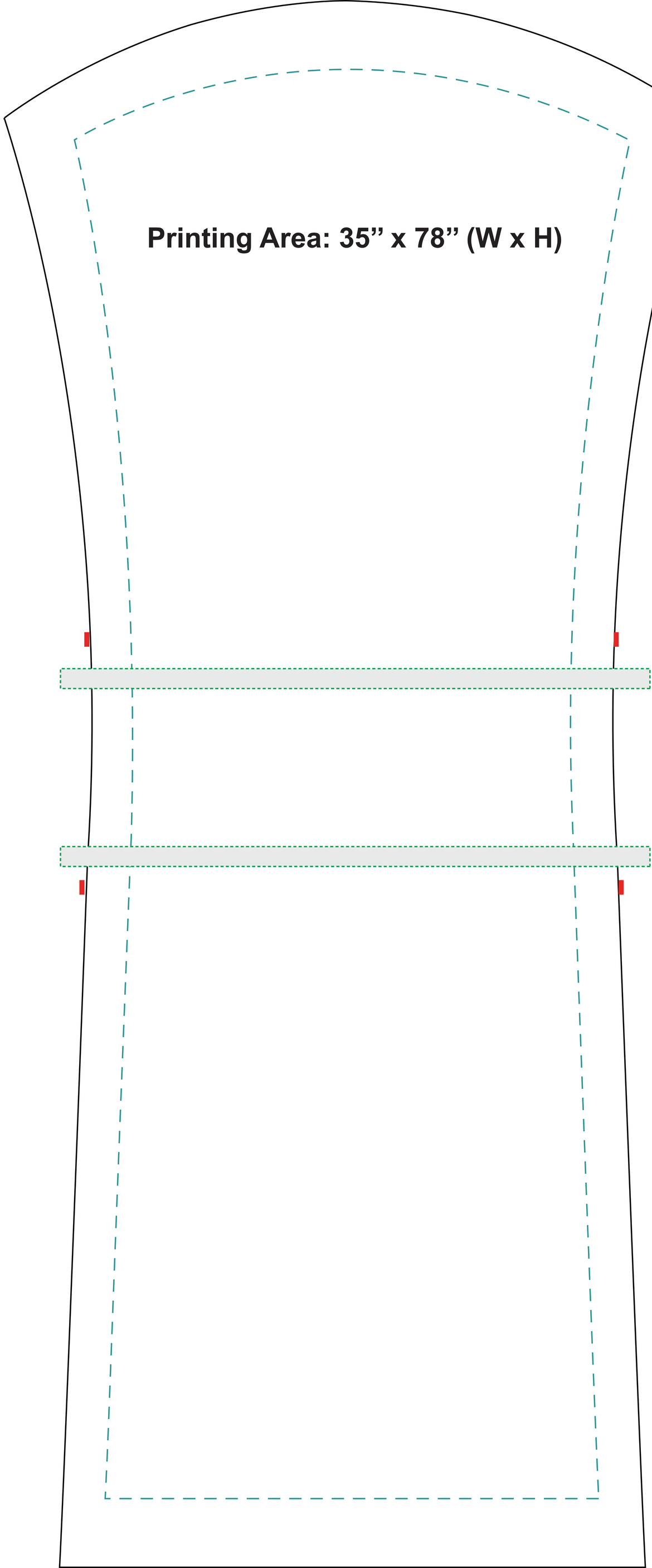
Printing Area: 35” x 78” (W x H)